ELECTRIC ARTICULATING BOOM LIFTS

AB14EJ (AB460EJ)/AB16EJ (AB520EJ)

Compliant with CE/ANSI/AS/GB standards

PRODUCT HIGHLIGHTS

Suitable for Working in Narrow Space

- These machines are designed with narrow chassis, lower stowed height enables to pass standard doorways and travel in narrow aisles both indoors and outdoors
- It is easy to get access to up and over with proportional control joysticks

Easy Maintenance

- One button for trouble shooting by checking a 5 inch LED screen on the ground control, manuals free
- AGM maintenance-free batteries come as standard, long cycle life and no worries of maintenance decreasing TCO

Electrical Emergency Lowering System

- When the main power system is out of power or fails, it is easy and highly efficient to bring platform lowering to ground from both ground and platform control by using a separate auxiliary power unit

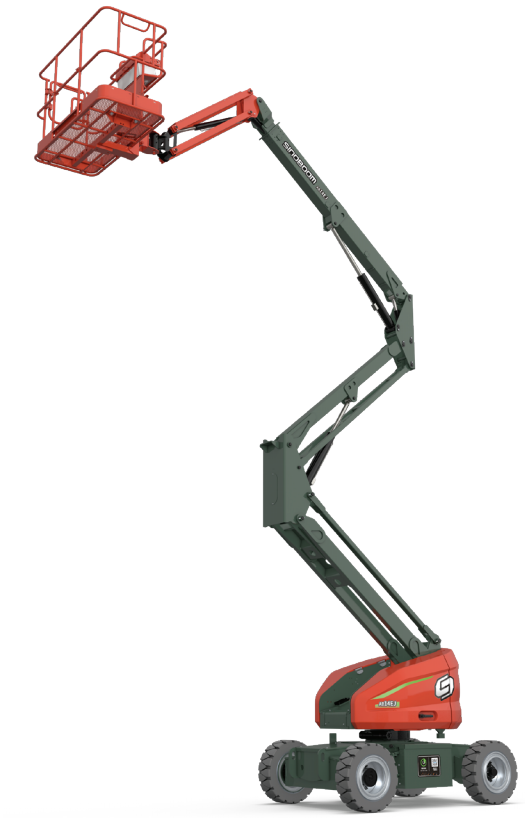

Standard Features		
5 inch LED screen	2WD x 2WS	Electrical emergency lowering system
Proportional control with 2 joysticks	Automotive-grade sleeves for all pipes	Weighing system
Hydraulic platform leveling	Max tilt rating to 5°	Emergency stop system
Horn & buzzer	Footswitch	Fault diagnosis system
Flashing beacon	Manual storage box	Tilt protection system
Foam-filled non-marking tires	Telematics-ready connector	Secondary guarding device
Emergency power system	Lead-acid battery	
Options & Accessories		
Solid tires	Overhead anti-collision device	Glazier kit
Half mesh	Anti-pinch rail	1.45m(4'9") / 1.83m(6') platform
AC power to platform	Lithium battery	Track Unit (GPS)
Working light on the platform	Non-marking tire	

SINOBOOM™

PARTNERS IN ACCESS™

SINOBOOM.COM | SALES@SINOBOOM.COM

NO.128 EAST JINZHOU AV., NINGXIANG HI-TECH INDUSTRY PARK, CHANGSHA, HUNAN, CHINA, 410600

ELECTRIC ARTICULATING BOOM LIFTS

AB14EJ (AB460EJ)/AB16EJ (AB520EJ)

Compliant with CE/ANSI/CSA/AS/KCS/EAC standards

Model	AB14EJ (AB460EJ)	AB16EJ (AB520EJ)
Dimensions		
Max Platform Height	14 m (45'11")	15.7 m (51'6")
Max Working Height	16 m (52'6")	17.7 m (58'1")
Max Horizontal Outreach	7.6 m (24'11")	9.3 m (30'6")
Max Up and Over Clearance	7.9 m (25'11")	7.9 m (25'11")
A Stowed Length	6 m (19'8")	6.8 m (22'4")
B Overall Width	1.73 m (5'8")	1.9 m (6'3")
C Stowed Height	2 m (6'7")	2 m (6'7")
Stowed Length (Transport)	6 m (19'8")	6.8 m (22'4")
Overall Width (Transport)	1.73 m (5'8")	1.9 m (6'3")
Stowed Height (Transport)	2 m (6'7")	2 m (6'7")
D Wheelbase	1.9 m (6'3")	1.9 m (6'3")
Ground Clearance	0.2 m (8")	0.2 m (8")
Platform Dimensions(L×W×H)	1.45 m×0.85 m×1.1 m (4'9"×2'9"×3'7")	1.83 m×0.85 m×1.1 m (6'×2'9"×3'7")
Performance		
Max Platform Capacity	230 kg (507 lbs)	230 kg (507lbs)
Max Platform Occupants	2 Persons	2 Persons
Drive Speed (Stowed)	0～5.2 km/h (0～3.2 mph)	0～5.2 km/h (0～3.2 mph)
Drive Speed (Raised)	0～0.8 km/h (0～0.5 mph)	0～0.8 km/h (0～0.5 mph)
Gradeability	30%	30%
Turntable Rotation	355° /Non-continuous	355° /Non-continuous
Platform Rotation	160°	160°
Tilt Rating	5°	5°
Turning Radius (Inside/Outside)	1.15 m/3.51 m (3'9"/11'6")	0.7 m/3.31 m (2'4"/10'10")
Turntable Tail-Swing	0 m	50 mm (2")
Max Allowable Side Force	400 N (90 lbf)	400 N (90 lbf)
Max Allowable Wind Speed	12.5 m/s (28 mph)	12.5 m/s (28 mph)
Tire Spec/Type	240/55D17.5 (foam-filled) | 250-15 (solid) 27×10.5-15Rough-terrain(foam-filled) 27×10-15Rough-terrain(foam-filled)	240/55D17.5 (foam-filled) | 250-15 (solid) 27×10.5-15Rough-terrain(foam-filled) 27×10-15Rough-terrain(foam-filled)
Power		
Drive × Steer	2WD×2WS	2WD×2WS
Battery (Voltage/Capacity)	8×6 V, 335 Ah (5 hr)/390 Ah (20 hr) (lead acid battery) 51.2V / 315 Ah (lithium battery)	8×6 V, 335 Ah (5 hr)/390 Ah (20 hr) (lead acid battery) 48 V / 315 Ah (lithium battery)
Hydraulic Tank Capacity	40L (8.8 gal (UK)/10.6 gal (US))	40L (8.8 gal (UK)/10.6 gal (US))
System Voltage	12 VDC	12 VDC
Weight		
Weight	7,160 kg (15,785 lbs)	7,380 kg (16,270 lbs)
Standards Compliance	CE/ANSI/CSA/AS/KCS/EAC	CE/ANSI/CSA/KCS/EAC

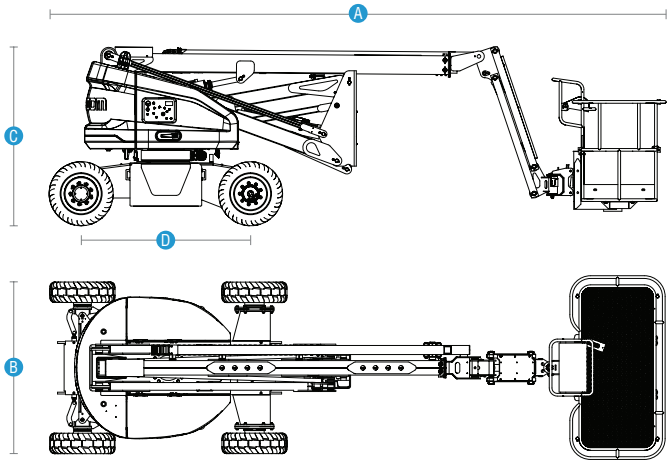

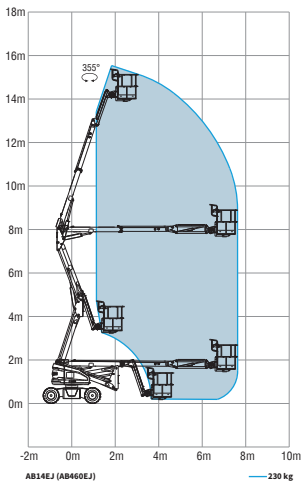

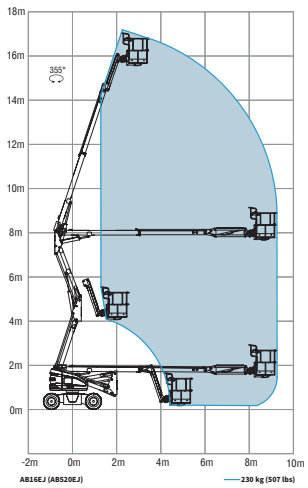

We reserve the right to make specification. The above represents the current specifications at time of publications. 11. 2025